The Genuine. The Original.

OVERHEAD DOOR®

HOMEOWNER'S GARAGE DOOR MANUAL

Models: 981, 982, 983, 984

Read this manual carefully and observe all warnings when operating or maintaining your garage door.

1-800-929-DOOR

www.OverheadDoor.com

Keep this manual for future reference.

Label Placement

IMPORTANT: IF THE LABELS ARE NOT APPLIED AT THE FACTORY, THEN ENSURE YOU PLACE ALL LABELS IN POSITION, AS SHOWN.

NOTE: The Spring Warning tag(s) are factory attached (one per spring).

NOTE: Because of different configurations, some labels may require minor relocations.

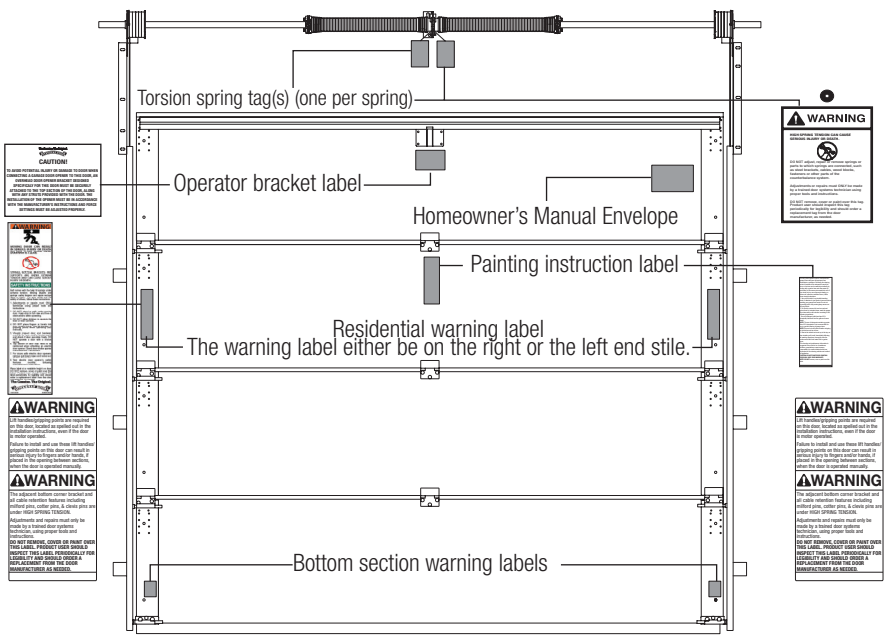

Counterbalance Assemblies

⚠WARNING

HOMEOWNER! TORSION SPRINGS SHOULD ONLY BE REMOVED, INSTALLED, REPAIRED OR ADJUSTED BY A TRAINED DOOR SYSTEM TECHNICIAN. ATTEMPTING TO REMOVE, INSTALL, REPAIR OR ADJUST A TORSION SPRING ASSEMBLY WITHOUT PROPER TRAINING AND TOOLS MAY RESULT IN AN UNCONTROLLED RELEASE OF SPRING FORCES WHICH COULD CAUSE SERIOUS OR FATAL INJURY.

BOTTOM FIXTURES, CABLES, DRUMS, PULLEYS, SHAFTS, AND BRACKETS ARE UNDER HIGH SPRING TENSION. DO NOT ATTEMPT REPAIRS ON ANY OF THESE ITEMS. CALL A TRAINED DOOR SYSTEM TECHNICIAN.

Cleaning Your Steel And Fiberglass Garage Door

IMPORTANT: DO NOT USE A PRESSURE WASHER ON GARAGE DOOR!

While factory-applied finishes on garage doors are durable, it is desirable to clean them on a routine basis. Some discoloration of the finish may occur when a door has been exposed to dirt-laden atmosphere for a period of time. Slight chalking may also occur as a result of direct exposure to sunlight.

Cleaning the door will generally restore the appearance of the finish. To maintain an aesthetically pleasing finish of the garage door, a periodic washing of the garage door is recommended.

A mild detergent solution consisting of one cup detergent (with less than 0.5% phosphate) dissolved into five gallons of warm water is recommended to aid in the removal of most dirt.

NOTE: The use of detergents containing greater than 0.5% phosphate is not recommended for use in general cleaning of garage doors.

NOTE: Be sure to clean behind weather stripping on both sides and top of door.

CAUTION: NEVER MIX CLEANSERS OR DETERGENTS WITH BLEACH.

GLASS CLEANING INSTRUCTIONS:

Clean with a mild detergent solution (same as above) and a soft cloth. After cleaning, rinse thoroughly.

ACRYLIC CLEANING INSTRUCTIONS:

Clean acrylic glazing with nonabrasive soap or detergent and plenty of water. Use your bare hands to feel and dislodge any caked on particles. A soft, grit-free cloth, sponge or chamois may be used to wipe the surface. Do not use hard or rough cloths that will scratch the acrylic glazing. Dry glazing with a clean damp chamois.

NOTE: DO NOT USE any window cleaning fluids, scouring compounds, gritty cloths or solvent-based cleaners of any kind.

Steel Preparation For Painting

STEEL (SURFACE PREPARATION FOR PAINTING):

Wax on the surface must be removed or paint peeling/flaking will result. To remove this wax, it will be necessary to lightly scuff the surface with a fine steel wool pad, saturated with soapy water. A final wipe and rinse should be done with clean water only, to remove any loose particles and any soapy film residue.

Surface scratches, which have not exposed the metal substrate, can be lightly buffed or sanded out with 0000 steel wool or No. 400 sand paper. Care must be taken to not expose the substrate under the paint. Once the substrate is exposed, the likelihood for rusting is greatly increased.

If substrate is exposed, it must be treated to prevent rust from forming. Sand the exposed area lightly and paint with a high quality metal primer, specifically intended for galvanized surfaces, to protect the area from corrosion. Allow for drying time shown on primer can label before applying topcoat.

The surface of the factory-applied finish, that is being painted, must not be too smooth, or the paint will not adhere to it. It is advisable to test in an inconspicuous area, to evaluate adhesion. If poor adhesion is observed, surface preparation for painting the factory-applied finish must be repeated until desired results are achieved. Again, care must be taken to not expose the substrate under the paint.

STEEL (PAINTING):

After surface has been properly prepared, it must be allowed to dry thoroughly, and then coated immediately with premium quality latex house paint. Follow paint label directions explicitly. Oil base or solvent base paints are not recommended. Please note that if substrate is exposed and not properly primed, painting with latex paint may cause accelerated rusting of the steel in the exposed area.

NOTES:

1. Re-painting of finish painted steel doors cannot be warranted, as this condition is totally beyond the door manufacturer's control.

2. Consult a professional coatings contractor if in doubt about any of the above directions.

3. Follow directions explicitly on the paint container labels for proper applications of coatings and disposal of containers. Pay attention to acceptable weather and temperature conditions in which to paint.

Fiberglass Refinishing and Finishing

REFINISHING:

The top coat on a factory finished fiberglass door may require a re-coat after 1-3 years if the surface appears chalky or faded. Reapply a top coat as follows: (Always test on a small area prior to top coating the entire door).

1. Clean surfaces with soap and water, mineral spirits or naptha.

NOTE: Light scuffing of surface may be required using Scotch-Brite™ pads.

2. Apply a commercial brand of exterior grade top coat for fiberglass, following the manufacturer's instructions.

⚠WARNING

HOMEOWNER! TORSION SPRINGS SHOULD ONLY BE REMOVED, INSTALLED, REPAIRED OR ADJUSTED BY A TRAINED DOOR SYSTEM TECHNICIAN. ATTEMPTING TO REMOVE, INSTALL, REPAIR OR ADJUST A TORSION SPRING ASSEMBLY WITHOUT PROPER TRAINING AND TOOLS MAY RESULT IN AN UNCONTROLLED RELEASE OF SPRING FORCES WHICH COULD CAUSE SERIOUS OR FATAL INJURY.

⚠WARNING

BOTTOM FIXTURES, CABLES, DRUMS, PULLEYS, SHAFTS, AND BRACKETS ARE UNDER HIGH SPRING TENSION. DO NOT ATTEMPT REPAIRS ON ANY OF THESE ITEMS. CALL A TRAINED DOOR SYSTEM TECHNICIAN.

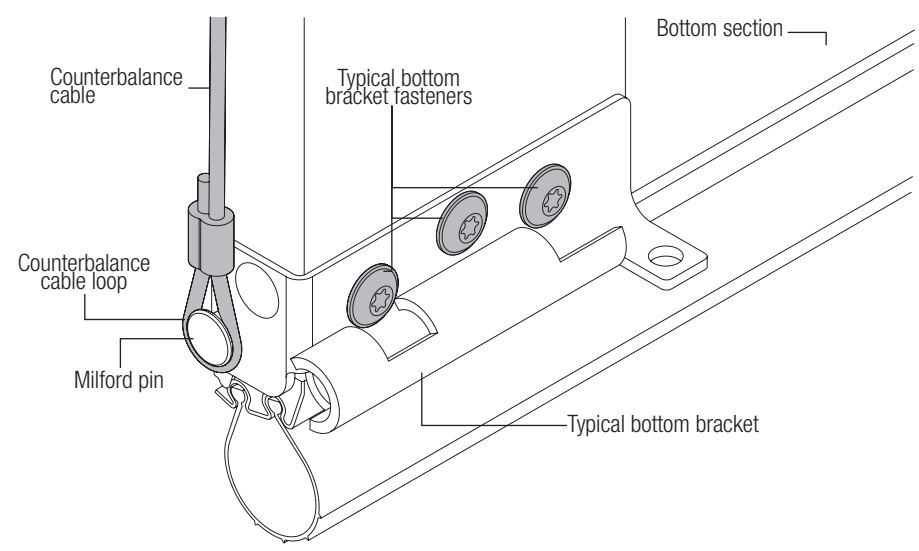

Safety Information

OVERVIEW OF POTENTIAL HAZARDS READ THIS SAFETY INFORMATION CONVENTIONS USED IN THESE INSTRUCTIONS:

Garage doors are large, heavy objects that move with the help of springs under high tension and electric motors. Since moving objects, springs under tension, and electric motors can cause injuries, your safety and the safety of others depend on you reading the information in this manual. If you have questions or do not understand the information presented, call your nearest trained door system technician or visit our website.

The following Safety Alert symbol and signal words are used throughout this manual to call attention to and identify different levels of hazard and special instructions.

⚠WARNING

THIS IS THE SAFETY ALERT SYMBOL. THIS SYMBOL ALERTS YOU TO POTENTIAL HAZARDS THAT CAN KILL OR HURT YOU AND OTHERS. ALL SAFETY MESSAGES WILL FOLLOW THE SAFETY ALERT SYMBOL AND THE WORD "DANGER", "WARNING", OR "CAUTION".

DANGER: Indicates an imminently hazardous situation which, if NOT avoided, will result in death or serious injury.

WARNING: Indicates a potentially hazardous situation which, if NOT avoided, could result in death or serious injury.

CAUTION: Indicates a potentially hazardous situation which, if NOT avoided, may result in injury or property damage.

NOTE: Indicates important steps to be followed or important considerations.

IMPORTANT SAFETY INSTRUCTIONS READ AND FOLLOW ALL INSTRUCTIONS SAVE THESE INSTRUCTIONS.

Potential Hazard	Effect	Prevention
	⚠ WARNING Could result in Death or Serious Injury	Keep people clear of opening while Door is moving. Do NOT allow children to play with the Door Opener. Do NOT operate a Door that jams or one that has a broken spring.
	⚠ WARNING Could result in Death or Serious Injury	Do NOT try to remove, install, repair or adjust springs or anything to which door spring parts are fastened, such as, wood blocks, steel brackets, cables or other like items. Installations, repairs and adjustments must be done by a trained door system technician using proper tools and instructions.

READ THIS SAFETY INFORMATION:

⚠WARNING

IF YOUR OLD DOOR OR NEW DOOR USES TORSION SPRINGS, DO NOT ATTEMPT TO REMOVE, INSTALL, REPAIR OR ADJUST THE SPRINGS YOURSELF. HAVE A TRAINED DOOR SYSTEM TECHNICIAN REMOVE, INSTALL, REPAIR OR ADJUST THEM. ATTEMPTING TO REMOVE, INSTALL, REPAIR OR ADJUST A TORSION SPRING ASSEMBLY WITHOUT PROPER TRAINING OR TOOLS MAY RESULT IN AN UNCONTROLLED RELEASE OF SPRING FORCES WHICH CAN CAUSE SERIOUS INJURY.

⚠WARNING

BE SURE THAT YOUR GARAGE COMPLIES WITH ALL APPLICABLE STATE AND OR LOCAL VENTILATION REQUIREMENTS BEFORE YOU ENCLOSE ANY VEHICLES IN THE GARAGE. GOOD VENTILATION AVOIDS FIRE AND HEALTH HAZARDS CAUSED BY FUMES ACCUMULATING WITHIN A WELL-SEALED GARAGE.

1. Do NOT permit children to play beneath or with any garage door or electric operating controls.

2. Keep hands and fingers clear of section joints, track, and other door parts when the door is opening and closing to avoid injury.

3. Bolts must be installed at the rear end of horizontal tracks. These act to stop the rollers and keep the door from rolling off the back of the track.

4. Track installations must use sway braces on the rear track hangers to prevent sideways movement. If the tracks are NOT firmly stabilized they might spread, allowing the door to fall and cause severe injury and damage.

©COPYRIGHT 2010 OVERHEAD DOOR CORPORATION
Part No. 344970 NEW 08/05/2010

5. Springs, cables, and Bottom Corner Brackets are under strong spring tension. Do NOT attempt to remove, repair or adjust any fasteners on these components or anything to which these parts are attached, such as wood blocks, steel brackets, or other like items. You could suddenly release spring forces and risk severe injury.

6. If the garage door and/or any of the supporting tracks are damaged, operating the door could be hazardous. Take the door out of service and call a trained door system technician to promptly service or repair the door.

7. KEEP DOORS PROPERLY BALANCED. An improperly balanced door increases the risk of severe injury or death. Have a trained door system technician make repairs to cables, spring assemblies and other hardware as necessary.

8. Doors equipped with automatic door operators can cause serious injury or death if NOT properly adjusted and operated. To ensure safety of these doors:

a) Never let children operate or play with the door controls. Keep the remote control away from children,

b) Always keep the moving door in sight and people and objects away from the door until the door is completely closed. NO ONE SHOULD CROSS THE PATH OF THE MOVING DOOR,

c) NEVER GO UNDER A STOPPED, PARTIALLY OPEN DOOR,

d) Test operator monthly. The door MUST reverse on contact with a 1-1/2" high object (or a 2" x 4" board laid flat) at the center of the doorway on the floor. If the door does NOT reverse, re-test the door operator after adjusting either the force or the limit of travel in accordance with the manufacturer's instructions. Failure to adjust the operator properly may result in severe injury or death,

e) When possible, use the emergency release only when the door is closed. Use caution when using this release with the door open. Weak or broken springs are capable of increasing the rate and force of door closure and increasing the risk of severe injury or death, and

f) On electrically operated doors, pull down ropes must be removed and locks must be removed or made inoperative in the open (unlocked) position..

Recommendations

The manufacturer has designed and sized the components specifically for each type of door. The door will operate safely and efficiently over an extended period of time if it is **PROPERLY INSTALLED, OPERATED**, and **MAINTAINED**. The manufacturer recommends that the garage door be inspected and lubricated regularly as described in this manual.

General Information

Operate the door only when it is properly adjusted and free of obstructions. If the door is hard to operate or does not move, call a trained door system technician for repair.

If door is to be electrically operated, remove pull ropes and remove or disable the lock.

Repaint the door when paint is worn or damaged. Do not paint track, rollers, hinges, lift cables, springs, lock, or warning labels.

CAUTION: KEEP ICE AND SNOW FROM ACCUMULATING AT THE BOTTOM OF THE DOOR DURING WINTER WEATHER CONDITIONS. ICE AND/OR FROZEN SNOW MAY CAUSE THE DOOR AND BOTTOM SEAL TO STICK TO THE FLOOR. OPERATING A STRUCK DOOR MAY CAUSE PERMANENT DAMAGE TO THE DOOR SYSTEM.

Manual Operation

If provided, always use lift handles/ suitable gripping points when operating the door manually. Do not place fingers or hands between sections. Use step plates, if provided, for manual operation.

Maintenance

All mechanical devices require periodic service and/or maintenance, and garage doors are no exception. The amount and frequency of preventive maintenance required depends on the local environment conditions and the frequency of door use. Preventive maintenance should be performed at least every six months, however more maintenance may be required if conditions warrant. Maintenance includes lubrication of moving parts and inspection of certain components for tightness. The following maintenance and inspection recommendations may be established until actual operating conditions dictate otherwise.

Door Tracks

Keep tracks free of oil or grease so rollers move freely. Grease attracts dirt and dust which build up and keep door from moving smoothly.

LIGHTLY OIL: Hinge Points, Steel Roller Stems and inner race assembly (Non-metal rollers do not require lubrication.), Locking Device moving parts, Torsion Spring (Head plate bearing surfaces, torsion tube, and spring coil surfaces).

Lubrication reduces wear and friction. A 30w or other medium weight oil is satisfactory. Wipe off excess oil from door and track surfaces.

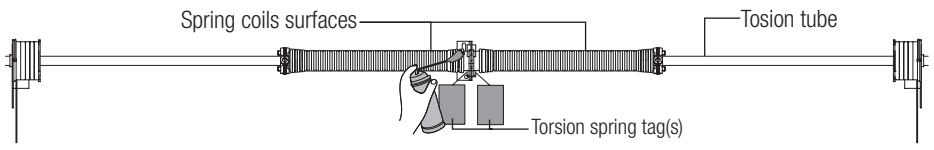

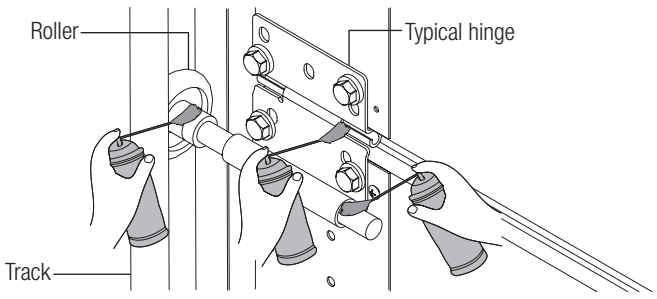

Hardware Inspection

Close and lock the door. Inspect the handles, step plates, hinges, top fixtures, bottom fixtures, locking devices, and track brackets to make sure that they are securely attached. Tighten fasteners as necessary. **DO NOT** over tighten; excess tightening may strip the threads and make the fastener useless. Un-lock and open the door.

Broken or Slipped Cable

If a cable breaks, or cable slips off a torsion spring drum, the door may cock or wedge into the tracks. DO NOT continue to use the door. DO NOT attempt repairs. Call a trained door system technician to repair the door.

Broken Spring

If a spring breaks, the door will not be counterbalanced and may fail if opened. DO NOT continue to use the door. DO NOT attempt repairs. Call a trained door system technician to repair the door.

Cable Inspection

Inspect the cables. The cables should be tight and secured to the bottom fixtures. The cables should not rub against the door, track or any other objects. Cables with frayed or broken strands should be replaced by a trained door system technician.

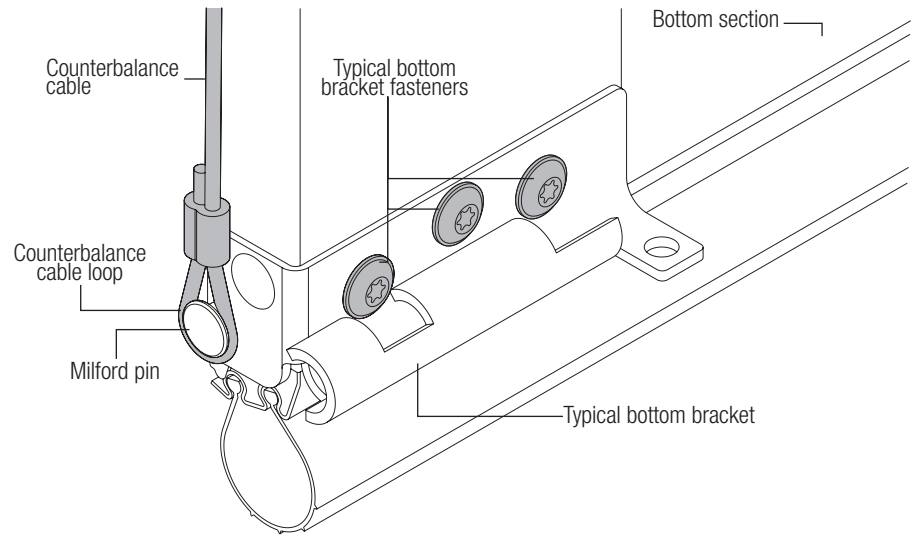

⚠ WARNING

NEVER LOOSEN FASTENERS ON BOTTOM FIXTURE. USE CAUTION WHEN TIGHTENING FASTENERS BECAUSE BOTTOM FIXTURE IS UNDER HIGH SPRING TENSION.

Limited Warranty

Impression Collection
Limited Warranty

The Distributor of Overhead Door Corporation products whose name appears below ("Seller") warrants to the original purchaser of the Impression™ Collection 981,982,983 or 984 Series Residential Garage Door ("Product"), subject to all of the terms and conditions hereof, that the Product and all components thereof will be free from defects in materials and workmanship for the following period(s) of time, measured from the date of installation:

- Limited Lifetime* – Against the Product becoming inoperable due to rust-through of the steel skin backer, caused by cracking, splitting or other deterioration of the steel skin, due to structural failure caused by separation or degradation of the foam insulation, or due to failure of metal hardware components (excluding springs) or track.
- Three (3) Years – Against delamination of the fiberglass skin resulting from a defect in the fiberglass skin or peeling, cracking, chalking or fading of the original factory-applied coating. Repainting or refinishing of the Product will void the factory-applied coating warranty.
- One (1) year – For springs.

* Limited Lifetime means for so long as the original purchaser owns the home in which the product was originally installed.

Seller's obligation under this warranty is specifically limited to repairing or replacing, at its option, any part which is determined by Seller to be defective during the applicable warranty period. Seller's repair or replacement labor is included for a period of One (1) year from the date of installation. After that, any labor charges are excluded and will be the responsibility of the purchaser.

This warranty gives you specific legal rights, and you may also have other rights which vary from state to state. This warranty is made to the original purchaser of the Product only, and is not transferable or assignable. This warranty applies only to Product installed in a residential or other non-commercial application. It does not cover any Product installed in commercial or industrial building applications. This warranty does not apply to any unauthorized alteration or repair of the Product, or to any Product or component which has been damaged or deteriorated due to misuse, neglect, accident, puncture, incorrect installation of hardware, failure to provide necessary maintenance, normal wear and tear, or acts of God or any other cause beyond the reasonable control of Seller, or as a result of having been exposed to toxic or abrasive environments including blowing sand, salt water, salt spray and toxic chemicals or fumes.* This Product comes with specific maintenance instructions which must be followed; failure to follow these instructions will void this warranty.

*This warranty specifically excludes fading or change in color that is not uniform due to unequal exposure to sunlight or other elements.

ALL EXPRESS AND IMPLIED WARRANTIES FOR THE PRODUCT, INCLUDING BUT NOT LIMITED TO ANY IMPLIED WARRANTIES OF MERCHANTABILITY AND FITNESS FOR A PARTICULAR PURPOSE, ARE LIMITED IN TIME TO THE APPLICABLE WARRANTY PERIOD REFLECTED ABOVE. NO WARRANTIES, WHETHER EXPRESS OR IMPLIED, WILL APPLY AFTER THE LIMITED WARRANTY PERIOD HAS EXPIRED. Some states do not allow limitations on how long an implied warranty lasts, so the above limitation may not apply to you.

ALL EXPRESS AND IMPLIED WARRANTIES FOR THE PRODUCT, INCLUDING BUT NOT LIMITED TO ANY IMPLIED WARRANTIES OF MERCHANTABILITY AND FITNESS FOR A PARTICULAR PURPOSE, ARE LIMITED IN TIME TO THE APPLICABLE WARRANTY PERIOD REFLECTED ABOVE. NO WARRANTIES, WHETHER EXPRESS OR IMPLIED, WILL APPLY AFTER THE LIMITED WARRANTY PERIOD HAS EXPIRED. Some states do not allow limitations on how long an implied warranty lasts, so the above limitation may not apply to you.

IN NO EVENT SHALL OVERHEAD DOOR CORPORATION BE RESPONSIBLE FOR, OR LIABLE TO ANYONE FOR, SPECIAL, INDIRECT, COLLATERAL, PUNITIVE, INCIDENTAL OR CONSEQUENTIAL DAMAGES, even if Overhead Door Corporation has been advised of the possibility of such damages. Such excluded damages include, but are not limited to, loss of use, cost of any substitute product, or other similar indirect financial loss. Some states do not allow the exclusion or limitation of incidental or consequential damages, so the above limitation or exclusion may not apply to you.

Claims under this warranty must be made promptly after discovery, within the applicable warranty period, and in writing to the Seller whose name and address appear below. The purchaser must allow Seller a reasonable opportunity to inspect any Product claimed to be defective prior to removal or any alteration of its condition. Proof of the purchase and/or installation date, and identification as the original purchaser, may be required. There are no established informal dispute resolution procedures of the type described in the Magnuson-Moss Warranty Act.

- NAME OF DISTRIBUTOR/INSTALLER:_____
- ADDRESS OF DISTRIBUTOR/INSTALLER:_____